Magnatech LED Limited

18M HIGH STANDARD LIGHT PYLON

General Structural Drawings

Structural Drawings

DRAWING LIST		
SHEET NUMBER	DESCRIPTION	REVISION
S001	STANDARD NOTES	A
S002	STANDARD NOTES	A
S003	LIGHT PYLON ELEVATION	A
S004	LAMP CROSS BAR DETAIL	B
S005	PYLON TOP SECTION	A
S006	PYLON BOTTOM SECTION	A
S007	FOUNDATION DETAIL	E

Job No: 66865
Date of Issue: 24/07/2024
Revision: E
Prepared by: SW
Drawn by: SW
Checked by: NC
Approved by: NC

JOB NO	DWG NO	REV
66865	S000	E

Architecture
Building Surveying
Structural Engineering
Building Services Engineering
Project Management

Land Surveying
Civil Engineering
Enviromental Engineering
Geotechnical Engineering
Process & Mechanical Engineering

Babbage Consultants Limited
128 Montreal Street, Sydenham, Christchurch 8023
PO Box 2373 - Christchurch 8140, New Zealand
T: 03 379 2734 F: 03 379 1642
E: chch@babbage.co.nz www.babbage.co.nz

GENERAL

1. THESE DRAWINGS SHALL BE READ IN CONJUNCTION WITH ALL OTHER APPROVED CONSULTANTS DRAWINGS AND SPECIFICATIONS AND WITH SUCH AUTHORISED WRITTEN INSTRUCTIONS THAT MAY BE ISSUED DURING THE COURSE OF THE CONTRACT.
2. NO WORK SHALL BE CARRIED OUT WITHOUT A BUILDING CONSENT OR CONFIRMATION OF WORKS BEING EXEMPT FROM BUILDING CONSENT.
3. REFER TO THE ARCHITECTS DRAWINGS FOR ALL NIBS, REBATES, SETDOWNS AND THE LIKE AS WELL AS ANY SETTING OUT NOT SHOWN HEREIN. ALL DISCREPANCIES IN SETTING OUT SHALL BE REFERRED TO THE ENGINEER BEFORE PROCEEDING.
4. SETOUT OF THE STRUCTURE ON THE SITE IS SHOWN ON THE ARCHITECTS DRAWINGS.
5. THE DRAWINGS AND SPECIFICATION SHALL TAKE PRECEDENCE OVER THESE NOTES.
6. ALL DIMENSIONS RELATIVE TO SETTING OUT OF SITE WORK SHALL BE VERIFIED BY THE CONTRACTOR BEFORE CONSTRUCTION AND FABRICATION IS COMMENCED.
7. THE ENGINEERS DRAWINGS SHALL NOT BE SCALED.
8. DURING CONSTRUCTION THE CONTRACTOR SHALL BE RESPONSIBLE FOR MAINTAINING THE STRUCTURE IN A STABLE AND TIDY CONDITION ENSURING NO PART BECOMES UNDULY STRESSED BY CONSTRUCTION ACTIVITIES.
9. WORKMANSHIP AND MATERIALS ARE TO BE IN ACCORDANCE WITH THE NEW ZEALAND BUILDING CODE AND RELEVANT DESIGN STANDARDS INCLUDING LOCAL AUTHORITY REGULATIONS. WHERE THE DRAWINGS CONFLICT WITH THE BUILDING CODE OR THE LOCAL AUTHORITY REGULATIONS THE ENGINEER SHALL BE CONSULTED.
10. IF DURING CONSTRUCTION ANY PART OF THE WORKS SHOW SIGNS OF DISTRESS, EXCESSIVE DEFLECTION, CONFLICT OF COMPONENTS OR OTHER PROBLEMS, THE CONTRACTOR SHALL IMMEDIATELY NOTIFY THE ENGINEER WHO SHALL INVESTIGATE AND ISSUE SUCH INSTRUCTIONS AS ARE CONSIDERED NECESSARY.
11. ALTERNATIVE MATERIALS AND METHODS TO THOSE SPECIFIED MAY ONLY BE USED WITH THE WRITTEN APPROVAL OF THE ENGINEER.
12. THE DESIGN ADEQUACY INCORPORATED IN THESE DRAWINGS IS SUBJECT TO THE REQUIREMENTS INCLUDED IN THE SPECIFICATION FOR THE WORKS AND THE DESIGN ASSUMPTIONS INCORPORATED INTO THE CALCULATIONS AND REPORTS FOR THE PROJECT.
13. ALL DIMENSIONS ARE IN MILLIMETRES UNLESS STATED OTHERWISE. ALL LEVELS ARE EXPRESSED IN MILLIMETRES.

INSPECTIONS

14. THE CONTRACTOR SHALL PROVIDE THE ENGINEER 48 HOURS MINIMUM NOTICE OF NEEDING AN INSPECTION OF THE WORKS. REFER TO THE BUILDING CONSENT DOCUMENTATION AND THE ENGINEERS INSPECTION SCHEDULE FOR THE REQUIRED INSPECTIONS. REQUESTING INSPECTIONS IS THE RESPONSIBILITY OF THE CONTRACTOR.
15. THE CONTRACTOR MUST BE SATISFIED THAT THE WORKS HAVE BEEN COMPLETED IN ACCORDANCE WITH THE PLANS AND SPECIFICATIONS BEFORE CONFIRMING AN INSPECTION BY THE ENGINEER. ANY ADDITIONAL INSPECTION COSTS DUE TO WORK BEING INCOMPLETE MAY BE PASSED ONTO THE CONTRACTOR.

STANDARD ABBREVIATIONS

GENERAL

BOT	BOTTOM	NO	NUMBER
CGL	CLEARED GOUND LEVEL	NOM	NOMINAL
CL	CENTRELINE	NTS	NOT TO SCALE
COL	COLUMN	OA	OVERALL
CONC	CONCRETE	OD	OUTSIDE DIAMETER
COS	CHECK ON SITE	PCD	PTCH CIRCLE DIAMETER
CRS	CENTRES	PVC	POLY VINYL CHLORIDE
DIA, Ø	DIAMATER	RL	REDUCED LEVEL
DIM	DIMENSION	SECT	SECTION
DPM	DAMP PROOF MEMBRANE	SQ	SQUATE
FL	FINISHED LEVEL	SS	STAINLESS STEEL
FWAR	FILLET WELD ALL ROUND	THRU	THROUGH
HDG	HOT DIP GALVANISED	TYP	TYPICAL
MAX	MAXIMUM	UNO	UNLESS NOTED OTHERWISE
MIN	MINIMUM	UTS	ULTIMATE TENSILE STRENGTH
NB	NOMINAL BORE		

CONCRETE

B	BOTTOM
C	CENTRE
CJ	CONTROL JOINT
D	DEFORMED BAR
EF	EACH FACE
EW	EACH WAY
HD	HIGH YIELD DEFORMED BAR
H	HIGH YIELD ROUND BAR
NF	NEAR FACE
PC	PRECAST CONCRETE
R	ROUND BAR
RB	REIDBAR
RC	REINFORCED CONCRETE
REINF	REINFORCEMENT
STR	STARTER
STRP	STIRRUP
T	TOP
TRM	TRIMMER
VL	VARYING LENGTH

STRUCTURAL STEEL

DB	DONOBRACE
EA	EQUAL ANGLE
FL	FLAT BAR
HSFG	HIGH STRENGTH FRICTION GRIP
MS	MILD STEEL
PFC	PARALLEL FLANGE CHANNEL
RB	REIDBAR
RHS	RECTANGULAR HOLLOW SECTION
S	SNUG TIGHT (I.E. M16 8.8/S)
SHS	SQUARE HOLLOW SECTION
SS	STAINLESS STEEL
TB	FULLY TENSIONED BEARING JOINT
UA	UNEQUAL ANGLE
UB	UNIVERSAL BEAM
UC	UNIVERSAL COLUMN

EXCAVATION AND BACKFILL

1. EXCAVATION SHALL NOT COMMENCE UNTIL SEDIMENT CONTROL PROVISIONS HAVE BEEN PUT IN PLACE.
2. EXCAVATION SHALL BE CARRIED OUT TO THE LINES AND LEVELS DIRECTED BY THE ENGINEER. THE MINIMUM EXCAVATION SHALL PROVIDE FOR THE REMOVAL OF ALL TOPSOIL, UNCONTROLLED FILL AND ANY OTHER UNSUITABLE MATERIAL TO EXPOSE COMPETENT NATURAL SOIL AND SHALL EXTEND A DISTANCE OUTSIDE THE BUILDING FOOTPRINT EQUAL TO THAT OF THE EXCAVATION DEPTH. THE FINAL EXTENT OF THE EXCAVATION SHALL BE DETERMINED BY THE ENGINEER ON INSPECTION OF THE EXPOSED EXCAVATION.
3. ALL EXCAVATION AND BACKFILLING SHALL BE CARRIED OUT IN THE DRY. IF DEWATERING IS REQUIRED TO ACHIEVE THIS, THEN THE SITE SHALL BE MAINTAINED IN A DEWATERED CONDITION FOR THE DURATION OF THE EARTHWORKS.
4. EXCAVATION AND FILLING SHALL BE MANAGED IN SUCH A WAY AS TO AID DRAINAGE AND MINIMISE SURFACE PONDING IN THE EVENT OF RAIN.
5. ALL FILL MATERIAL USED SHALL BE AP65 UNLESS SPECIFIED OTHERWISE ON THE DRAWINGS OR ON THE GEOTECHNICAL REPORT. HARDFILL SHALL BE SELECTED CLEAN FREE-DRAINING MATERIAL.
6. PRIOR TO ANY FILL BEING PLACED, THE EXCAVATED SURFACE SHALL BE COMPACTED IN A SIMILAR MANNER TO THAT TO BE USED FOR THE FILL. IF REQUIRED BY THE GEOTECHNICAL ENGINEER, PLACE A LAYER OF GEOTEXTILE (E.G. BIDIM A19) OVER THE PREPARED SURFACE. THE LAP OF THE GEOTEXTILE SHALL BE PER THE MANUFACTURERS SPECIFICATION, WHICH IS TYPICALLY NO LESS THAN 300mm. IF THE PLACEMENT OF THE GEOTEXTILE IS NOT OBSERVED BY THE ENGINEER PHOTOGRAPHIC EVIDENCE SHALL BE PROVIDED.

EXCAVATION AND BACKFILL (CONTINUED)

7. THE FILL MATERIAL SHALL BE SPREAD AND COMPACTED IN LAYERS OF UNIFORM QUALITY AND THICKNESS. FILL MATERIAL SHALL BE COMPACTED IN NO MORE THAN 200mm THICK LAYERS AND THE MINIMUM THICKNESS SHALL NOT BE LESS THAN 2.5 TIMES THE MAXIMUM PARTICLE SIZE.
8. FILL SHALL BE PLACED AND COMPACTED TO A UNIFORMLY DENSE CONDITION OF AT LEAST 95% OF ITS MAXIMUM DRY DENSITY AND TEST CERTIFICATES ISSUED TO THE ENGINEER FOR APPROVAL. COMPACTION OF EACH LAYER SHALL CONTINUE UNTIL THE WHOLE LAYER HAS ACHIEVED THE REQUIRED UNIFORM DENSITY.
9. WATER MAY BE ADDED AS NECESSARY TO AID COMPACTION BUT SHOULD BE LIMITED TO PREVENT HEAVING OF THE FILL UNDER THE WEIGHT OF THE COMPACTING EQUIPMENT AFTER COMPACTION.
10. PRIOR TO PLACING SLABS AND FOUNDATIONS, ENSURE THAT THE HARDFILL SURFACE HAS A SUITABLE BLINDING LAYER TO MINIMISE PROJECTIONS AND PROTECT THE DPM.

CONCRETE

1. ALL CONCRETE CONSTRUCTION IS TO BE IN ACCORDANCE WITH NZS 3109. THE CONTRACTOR IS REQUIRED TO MAINTAIN A COPY OF NZS3109 ON SITE.
2. ALL CONCRETE SHALL BE SUPPLIED FROM A READY MIXED CONCRETE BATCHING PLANT WHICH HOLDS A MINIMUM OF "HIGH GRADE" PRODUCTION STANDARD AS DEFINED BY NZS 3109.
3. CONCRETE SUPPLIER BATCHING AND QA INFORMATION IS TO BE KEPT AND SUPPLIED TO THE ENGINEER UPON REQUEST.
4. ALL CONCRETE SHALL BE FULLY COMPACTED BY APPROVED VIBRATION EQUIPMENT, WITH THE EXCEPTION OF SELF-COMPACTING CONCRETE WHERE THE USE OF THIS HAS BEEN PRE-APPROVED BY THE ENGINEER. VIBRATION SHALL BE APPLIED IN A UNIFORM PATTERN WITH CARE TAKEN NOT TO OVER-VIBRATE.
5. NO HOLES, CHASES OR EMBEDMENT OF PIPES OTHER THAN THOSE SHOWN ON THE STRUCTURAL DRAWINGS SHALL BE MADE IN CONCRETE MEMBERS WITHOUT THE APPROVAL OF THE ENGINEER.
6. ALLOW FOR ALL CAST-IN CLEATS, HOLDING DOWN BOLTS AND THE LIKE BEFORE LAYING CONCRETE.
7. WHERE APPROVED BY THE ENGINEER, ALL CONSTRUCTION JOINTS SHALL BE FULLY ROUGHENED IN LINE WITH NZS3109 TYPE B JOINT UNLESS NOTED OTHERWISE.
8. WHERE SPECIFIED, ALL CONTROL JOINTS SHALL BE PROPERLY FORMED AS DETAILED AND WHERE SHOWN ON THE DRAWINGS, OR AS SPECIFICALLY APPROVED BY THE ENGINEER.
9. SLABS ON GROUND SHALL BE SAWCUT TO THE LAYOUT ON THE DRAWINGS WITHIN 24 HOURS AFTER POURING. NO REINFORCING LAPS SHALL OCCUR AT SAWCUTS. IF SAWCUTS ARE NOT SHOWN ON THE DRAWINGS, CONTACT THE ENGINEER.
10. ALL SEALANTS AND WATERSTOPS SHALL BE INSTALLED IN STRICT ACCORDANCE WITH THE MANUFACTURERS WRITTEN INSTRUCTIONS.

SLABS

11. SLABS SHALL BE PLACED CONTINUOUSLY WITHOUT CONSTRUCTION JOINTS AND WITH STRICT ATTENTION TO AVOIDANCE OF COLD JOINTS AND PLASTIC SHRINKAGE.
12. SHOULD DELAYS OCCUR WITH CONCRETE SUPPLY, THE UNFORMED EDGES OF FRESHLY PLACED CONCRETE SHALL BE COATED WITH AN EVAPORATION RETARDANT (SIKAFILM OR SIMILAR APPROVED) AND JOINS SHALL BE SUITABLY VIBRATED ON CONTINUATION OF PLACING.
13. EVAPORATION RETARDANT SHALL BE APPLIED GENEROUSLY IN ACCORDANCE WITH NZS3109 TO SLAB SURFACES TO PREVENT PLASTIC SHRINKAGE UNDER ADVERSE AMBIENT CONDITIONS.
14. IN-SITU AND PRECAST SUSPENDED SLABS AND BEAMS SHALL BE GIVEN A POSITIVE UPWARD CAMBER OF 2mm PER 1000mm OF SPAN. ALLOWANCES SHALL BE MADE FOR CAMBER WHEN SETTING OUT LEVELS.

CURING

15. FRESHLY CAST CONCRETE SURFACES SHALL BE PROTECTED FROM MOISTURE EVAPORATION IN ACCORDANCE WITH NZS3109 AS SOON AS THE EXPOSED SURFACE HAS HARDENED SUFFICIENTLY BUT NOT LATER THAN TWO HOURS AFTER FINISHING.
16. CURING SHALL BE CONTINUOUS FOR AT LEAST SEVEN (7) DAYS USING ONE OF THE METHODS CONTAINED IN NZS3109. PHOTOGRAPHIC PROOF OF CURING SHALL BE PROVIDED TO THE ENGINEER.
17. ATTENTION SHALL BE GIVEN TO CURING METHODOLOGY DURING FROSTS IN ACCORDANCE WITH NZS3109 IF APPROPRIATE.

SURFACE FINISHES

18. CONCRETE SURFACES SHALL BE FINISHED TO THE STANDARD DESCRIBED IN NZS3114 FOR THE FOLLOWING ELEMENT CLASSIFICATIONS UNLESS SPECIFIED DIFFERENTLY BY THE ARCHITECT:

· FORMED FOUNDATIONS FACES BELOW ADJACENT GROUND LEVELS	F1
· FORMED FOUNDATIONS FACES ABOVE FINISHED GROUND LEVELS	F3
· FLOOR SLABS	U3
· UPPER SURFACES OF FOUNDATIONS	U2
· EXTERIOR SLABS (CONTRACTOR TO CHECK ARCHITECTS SLIP RESISTANCE REQUIREMENTS)	U4

19. IF THE ARCHITECT'S SPECIFICATION DIFFERS FROM THESE NOTES, THE CONTRACTOR SHALL CONSULT THE ENGINEER.

GROUT

20. WHERE REQUIRED BY THE DRAWINGS, GROUT SHALL BE SHRINKAGE COMPENSATED CEMENTITIOUS GROUT WITH COMPRESSIVE STRENGTH ≥ 50MPA. WHERE CAST AGAINST SAWCUT FACES OR BORES, THE FACE SHALL BE PREPARED WITH SUITABLE EPOXY TIE COAT TO EFFECT BOND. ALTERNATIVES SHALL BE APPROVED BY THE ENGINEER.
21. GROUTS, MORTARS AND EPOXIES SHALL BE USED IN STRICT ACCORDANCE WITH THE MANUFACTURERS WRITTEN INSTRUCTIONS.

CONCRETE GRADE AND COVER

22. UNLESS NOTED OTHERWISE ON THE DRAWINGS, THE FOLLOWING CONCRETE COMPRESSIVE STRENGTHS SHALL BE USED:

· SITE CONCRETE / BLINDING	17.5 MPa
· BLOCKWORK FILL	17.5 MPa
· FOUNDATIONS	25.0 MPa
· SLABS	30.0 MPa

23. UNLESS NOTED OTHERWISE, THE MINIMUM COVER TO REINFORCING SHALL BE:

SITUATION		FOUNDATIONS	BEAMS & COLUMNS	SLABS & WALLS
CAST AGAINST OR EXPOSED TO GROUND		75	75	75
CAST AGAINST GROUND BUT PROTECTED BY A DPM		50	50	50
EXPOSED TO WEATHER (B1)	IN-SITU	50	50	40
	PRECAST	40	40	35
NOT EXPOSED TO WEATHER (A1)	IN-SITU		40	25
	PRECAST		35	25

CONCRETE FIXINGS

24. THE CONTRACTOR SHALL MAKE ALL REASONABLE EFFORTS TO MAGNETIC OR RADAR SCAN AND MARK-OUT EXISTING REINFORCEMENT AND TENDONS WITH REFERENCE TO THE ORIGINAL CONSTRUCTION DRAWING SET, PRIOR TO DRILLING HOLES IN CONCRETE. DAMAGE TO EXISTING REINFORCING STEEL IS TO BE LOGGED BY THE CONTRACTOR AND CONVEYED TO THE ENGINEER.
25. UNLESS OTHERWISE NOTED ON THE DRAWINGS, CHEMICAL FASTENERS SHALL BE GRADE 8.8 GALVANISED THREADED ROD, FIXED WITH RAMSET C8 EPOXY. ALL HOLES ARE TO BE IMPACT DRILLED AND ARE TO BE THOROUGHLY CLEANED WITH COMPRESSED AIR PRIOR TO EPOXYING. THE CONTRACTOR IS TO HAVE A QUALITY CONTROL SYSTEM INCLUDING VISUAL MARKINGS AND INSTALLATION RECORDS TO HELP ENSURE THAT BEST PRACTICE IS MAINTAINED WITH REGARD TO ALL EPOXY FIXINGS. CORE DRILLED HOLES ARE NOT ACCEPTABLE WITHOUT ENGINEERS APPROVAL.
26. DIMENSIONS OF POST-FIXED ANCHORS SHALL BE AS PER THE DRAWINGS. IF DIMENSIONS ARE MISSING FROM THE DRAWINGS THE CONTRACTOR SHALL REQUEST SUCH DIMENSIONS FROM THE ENGINEER. DO NOT GUESS DIMENSIONS OR INSTALL TO KNOWN TYPICAL DIMENSIONS.

CONCRETE (CONTINUED)

CONCRETE FIXINGS

27. ALL POST FIXED ANCHORS ARE TO BE INSTALLED STRICTLY IN ACCORDANCE WITH THE MANUFACTURERS GUIDELINES. THE CONTRACTOR SHALL TEST THE FIRST ANCHOR AND THEN 5% AFTER THE FIRST ANCHOR TO ENSURE THAT THE LOAD CARRYING CAPACITY OF THE ANCHOR IS ACHIEVED. TESTING SHALL BE CARRIED OUT IN ACCORDANCE WITH THE MANUFACTURERS GUIDANCE UP TO THE WORKING LOAD OF THE ANCHOR

REINFORCING

1. ALL REINFORCING SHALL BE DUCTILE CLASS E, MICRO-ALLOY STEEL IN ACCORDANCE WITH AS/NZS 4671. NO QUENCHED AND TEMPERED STEEL IS TO BE USED.
2. SUPPORT FOR REINFORCING SHALL BE PLACED IN ACCORDANCE WITH NZS3109.
3. REINFORCING SHOWN ON THE DRAWINGS IS PRESENTED DIAGRAMMATICALLY AND NOT NECESSARILY IN THE TRUE LOCATION.
4. THE FIRST STIRRUP SHALL NOT TO BE PLACED FURTHER THAN THE LESSER OF 1/2 STIRRUP SPACING OR 50mm FROM SUPPORT FACE.

REINFORCING LAPS AND DEVELOPMENT

5. ALL REINFORCEMENT SHALL BE BENT COLD IN A SINGLE FLUID MOTION. IF RE-BENDING OF ALREADY BENT REINFORCING IS REQUIRED CONSULT THE ENGINEER BEFORE PROCEEDING.
6. ALL REINFORCEMENT SHALL BE STRAIGHT BETWEEN BENDS. WHERE BARS ARE BENT OR KINKED IN SUCH A MANNER THAT, IN THE OPINION OF THE ENGINEER, THEY WILL IMPAIR THE EFFICIENCY OF THE STRUCTURE, THEN THESE BARS SHALL BE REPLACED AT THE CONTRACTORS COST.
7. SPLICES IN REINFORCEMENT SHALL BE MADE IN THE POSITION SHOWN ON THE DRAWINGS, OR AS OTHERWISE APPROVED BY THE ENGINEER.
8. LAPS AND DEVELOPMENT OF REINFORCING SHALL BE IN ACCORDANCE WITH THE DRAWINGS OR THE ADJACENT TABLES WHERE THE DRAWINGS DO NOT SPECIFY LAPS. WHERE MAIN REINFORCING BARS ARE SHOWN WITH OFFSET SPLICES, THE SLOPE OF THE INCLINED PORTION OF THE BAR SHALL NOT EXCEED 1 IN 12.
9. STRAIGHT BAR LAPS SHALL BE STAGGERED IF POSSIBLE.
10. STARTER BARS SHALL BE FIXED IN PLACE SUCH THAT THEY DO NOT MOVE DURING LAYING OF THE FIRST CONCRETE POUR. REMEDIAL WORKS WHERE STARTERS SHIFT DURING CONCRETING WILL BE AT THE CONTRACTORS EXPENSE.
11. SPLICING OF REINFORCEMENT WHETHER BY LAPPING OR MECHANICAL SPLICE, SHALL BE AS SHOWN ON THE DRAWINGS OR AS SPECIFICALLY APPROVED BY THE ENGINEER, EXCEPT AS NOTED BELOW. REINFORCEMENT IN SLABS ON GRADE AND IN TOPPINGS SHALL BE SPLICED AS REQUIRED, BUT NOT THROUGH SLAB JOINTS. WELDED SPLICES ARE NOT ALLOWED EXCEPT IF SPECIFIED OR APPROVED BY THE ENGINEER
12. ALL BEAM AND COLUMN MAIN REINFORCEMENT LAP SPLICES SHALL HAVE CRANKED LAPS UNO.
13. WHERE LAPPED BARS ARE NOT IN DIRECT CONTACT AND SEPERATED BY MORE THAN 3 BAR DIA. THE LAP LENGTHS SHALL BE INCREASED BY 1.5 TIMES THE SEPERATION DISTANCE.
14. CRANKED LAPS SHALL BE THUS:

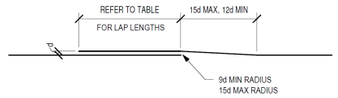

15. DEFORMED BAR LAPS SHALL BE IN ACCORDANCE WITH THE FOLLOWING TABLES:

25 MPa CONCRETE	BAR DIAMETER					
500MPa REINFORCING	HD10	HD12	HD16	HD20	HD25	HD32
TOP STEEL: HORIZ. STEEL WITH > 300mm CONCRETE BELOW	650	800	1050	1300	1650	2100
ALL OTHER STEEL	500	600	800	1000	1250	1600

30 MPa CONCRETE	BAR DIAMETER					
500MPa REINFORCING	HD10	HD12	HD16	HD20	HD25	HD32
TOP STEEL: HORIZ. STEEL WITH > 300mm CONCRETE BELOW	600	750	950	1200	1500	1900
ALL OTHER STEEL	500	550	750	950	1150	1500

40 MPa CONCRETE	BAR DIAMETER					
500MPa REINFORCING	HD10	HD12	HD16	HD20	HD25	HD32
TOP STEEL: HORIZ. STEEL WITH > 300mm CONCRETE BELOW	550	650	850	1050	1300	1650
ALL OTHER STEEL	400	500	650	800	1000	1300

COPYRIGHT BABBAGE CONSULTANTS LIMITED
UNAUTHORISED COPYING PROHIBITED
DO NOT SCALE THIS DRAWING
PLEASE REFER ALL QUERIES TO
BABBAGE CONSULTANTS LIMITED

Notes:

1. All Structural Drawings are to be read in conjunction with the Architectural Drawings.
2. All set out dimensions, levels, falls, slab set downs, rebates and cast in Architectural items are subject to confirmation by the Architect.
3. Refer to Drawing S001 for General Notes, Abbreviations and Symbols.

DRAWING REVISIONS

REV	DATE	DESCRIPTION
A	24/01/2024	Generic PS1

Babbage
partners in excellence ®
Babbage Consultants Limited
128 Montreal Street, Sydenham, Christchurch 8023
PO Box 2373 - Christchurch 8140, New Zealand
T: 03 379 2734 F: 03 379 1642
E: chch@babbage.co.nz www.babbage.co.nz

CLIENT / PROJECT / ADDRESS

MAGNATECH LIGHTING PYLON

18M HIGH STANDARD PYLON

DRAWING TITLE

STANDARD NOTES

	DATE	INITIAL
DESIGNED	24/01/2024	SW
DRAWN	24/01/2024	SW
CHECKED	24/01/2024	NC
APPROVED	24/01/2024	NC

SCALE

NTS

JOB NO.	DRAWING NO.	REVISION
66865	S001	A

REINFORCING (CONTINUED)

BENDING OF REINFORCEMENT
(A) BENDS FOR ALL BARS EXCEPT STIRRUPS AND TIES:

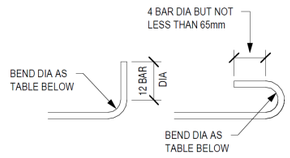

STEEL GRADE	BAR DIA. (mm)	MIN DIA. OF BEND
GRADE 300 / 500	6 – 20	5 BAR DIA.
GRADE 300 / 500	25 – 40	6 BAR DIA.

(B) BENDS FOR STIRRUPS AND TIES:

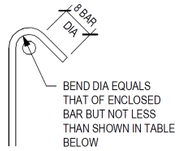

STEEL GRADE	BAR DIA. (mm)	MINIMUM DIA. OF BEND	
		PLAIN BARS	DEFORMED BARS
GRADE 300 / 500	6 – 20	2 BAR DIA.	4 BAR DIA.

(C) BARS PARTIALLY EMBEDDED IN CONCRETE SHALL NOT BE SITE BENT UNLESS SHOWN ON THE DRAWINGS OR SPECIFICALLY APPROVED BY THE ENGINEER. RE-BENDING IS NOT ALLOWED WITHOUT ENGINEERS APPROVAL.

REINFORCEMENT NOTATIONS
16. THE FOLLOWING ARE EXAMPLES OF THE REINFORCING NOTATIONS CONTAINED ON THE DRAWINGS.
· 5-D12-300 DENOTES 5-12mm DEFORMED BARS AT 300mm CENTRES
· 5-R12-300 DENOTES 5-12mm PLAIN ROUND BARS AT 300mm CENTRES
· 5-HD12-300 DENOTES 5-12mm HIGH YIELD DEFORMED BARS AT 300mm CENTRES
· 5-HR12-300 DENOTES 5-12mm HIGH YIELD ROUND BARS AT 300mm CENTRES

MESH REINFORCEMENT
17. MESH SHALL BE DEFORMED GRADE 500E DUCTILE MESH COMPLYING WITH AS/NZS 4671 UNLESS APPROVED OTHERWISE BY THE ENGINEER.
18. IN SLABS ON GRADE, WELDED WIRE MESH REINFORCEMENT TO BE LAPPED AS SHOWN BUT NOT LOCATED AT SAWCUTS.

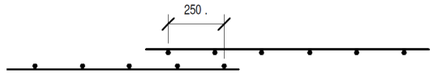

STRUCTURAL STEELWORK AND METALWORK

SHOP DRAWINGS
1. SHOP DRAWINGS ARE TO BE PREPARED AT THE CONTRACTORS COST. THE SHOP DRAWINGS SHALL BE MADE AVAILABLE TO THE ENGINEER FOR REVIEW UPON REQUEST AND WILL BE CHECKED FOR STRUCTURAL DETAILING ONLY.
2. IT IS THE CONTRACTORS RESPONSIBILITY TO VERIFY ALL DIMENSIONS ON SITE TO ENSURE SATISFACTORY FIT OF ALL NEW ELEMENTS.
3. ALL CONNECTIONS, SPLICES AND BASEPLATES SHALL BE IN ACCORDANCE WITH HERA REPORT R4-100

WORKMANSHIP AND MATERIALS
4. STEEL SHALL BE MILD STEEL OF APPROVED ORIGIN AND CONFORMING TO NZS 3404.
5. UNLESS OTHERWISE STATED ON DRAWINGS, STEEL GRADES SHALL BE THE FOLLOWING:
· OPEN SECTIONS (UB, UC, PFC, EA) G300+
· HOLLOW SECTIONS (SHS, RHS, CHS) G350L0
· FLATS AND PLATES G300
6. ANY MEMBER HAVING A NATURAL PRECAMBER MEETING THE TOLERANCES IN THE RELEVANT STANDARDS SHALL BE PLACED IN THE OPPOSITE DIRECTION TO GRAVITY DEFLECTION (I.E. SO THAT GRAVITY WILL STRAIGHTEN THE NATURAL PRECAMBER).
7. CAST IN ITEMS (SUCH AS HOLDING DOWN BOLTS) SHALL BE SET ACCURATELY BY TEMPLATE.
8. UNLESS NOTED OTHERWISE, ALL STEEL AGAINST CONCRETE SURFACE SHALL BEAR ON A 10mm NOMINAL LAYER OF DRYPACK GROUT. IF THE GROUT IS IN A VERTICAL SITUATION THEN THE GROUT SHALL BE EPOXY GROUT.

WELDING
9. ALL WELDING TO COMPLY WITH AS/NZS 1554.1.
10. ALL WELDED CONNECTIONS SHALL BE METAL ARC WELDED.
11. ALL WELDING SHALL BE CLASS SP, UNDERTAKEN BY WELDERS CURRENTLY QUALIFIED IN THE METHOD AND POSITION IN USE.
12. UNLESS NOTED OTHERWISE, WELD MATERIALS SHALL HAVE A STRENGTH OF AT LEAST 410MPa.
13. UNLESS NOTED OTHERWISE, ALL WELDS ARE TO BE GRADE SP 5mm FILLET WELD ALL AROUND.
14. ALL WELDING TO BE SUPERVISED BY QUALIFIED WELDING SUPERVISORS.
15. ALL WELDS TO BE INSPECTED (INCLUDING NDE METHODS) IN ACCORDANCE WITH AS/NZS 1554.1 TABLE 7.4 UNLESS NOTED OTHERWISE.
16. ALL FULL PENETRATION WELDS SHALL HAVE PREPARATION INSPECTED BY WELDING SUPERVISOR PRIOR TO LAYING OF ROOT RUN.
17. SITE WELDING SHALL BE CARRIED OUT ONLY WHERE ABSOLUTELY NECESSARY AND SHALL BE UNDERTAKEN BY ARC WELDING ONLY, SUBJECT TO 100% VISUAL INSPECTION BY WELDING SUPERVISOR.
18. EXPOSED WELDS AND IN PARTICULAR BUTT WELDS OF STOCK LENGTHS SHALL BE NEATLY FINISHED AND GROUND SMOOTH.
19. ALL BUTT WELDS SHALL BE FULL PENETRATION UNO.

STRUCTURAL STEELWORK AND METALWORK (CONT)

BOLTING
20. BOLTS BETWEEN STEEL AND STEEL TO BE G8.8 SNUG TIGHT (UNO) TO AS/NZS 1252. AT LEAST ONE WASHER SHALL BE PROVIDED UNDER THE HEAD AND NUT OF EACH BOLT ASSEMBLY.
21.WHERE SPECIFIED, BOLTS SHALL BE FULLY TENSIONED USING ONE OF THE METHODS IN NZS 3404 SECTION 15.2.5.
22. THE BOLTS SHALL BE SELECTED SO THAT THE PROJECTION BEYOND THE NUT IS NOT LESS THAN TWO THREADS AND NOT MORE THAN 10mm. NUTS SHALL GENERALLY BE PLACED ON THE UNDERSIDE OF ASSEMBLIES SO THAT THE BOLT REMAINS IN PLACE SHOULD THE NUT WORK LOOSE.
23. BOLTS SHALL BE SELECTED SO THAT THE THREAD DOES NOT CROSS THE SHEAR PLAN. CONTACT THE ENGINEER IF THIS IS NOT POSSIBLE.
24. HOLES FOR BOLTS SHALL BE DRILLED OR PUNCHED AND NOT GAS CUT. STANDARD HOLES SHALL BE D+2mm FOR BOLTS UP TO M24 OR D+3mm FOR LARGER BOLTS AND FIXINGS TO CONCRETE, UNLESS OTHERWISE NOTED. SLOTTED HOLES SHALL BE D+2mm WIDE (UP TO M24 AND D+3mm FOR LARGER BOLTS AND FIXINGS TO CONCRETE) AND 2.5D LONG, UNLESS OTHERWISE NOTED.
25. EDGE DISTANCES SHALL BE 1.75D FROM THE CENTRE OF THE BOLT TO THE CUT EDGE OF THE STEEL UNLESS SHOWN OTHERWISE ON DRAWINGS, WHERE D IS THE NOMINAL BOLT DIAMETER.
26. THE MINIMUM DISTANCE BETWEEN ADJACENT BOLTS SHALL BE AS INDICATED ON THE DRAWINGS, OR 2.5D IF NOT SHOWN.

FINISHES
27. ALL SURFACES SHALL BE FINISHED IN A TIDY MANNER. ALL SHARP CORNERS AND DEFECTS SHALL BE REMOVED.
28.FOR HOT DIP GALVANISED ITEMS ALLOW FOR TOLERANCE, VENT HOLES ETC. VENT HOLES SHALL BE SEALED AFTER GALVANISING.
29.ALL RHS MEMBERS ARE TO BE MADE CLOSED SECTIONS BY ADDING 3mm (MIN) WELDED END CAPS WHERE NOT SHOWN OTHERWISE.
30.STEELWORK SHALL HAVE COATINGS COMPLYING WITH THE FOLLOWING TABLE:

ELEMENT	SURFACE SPECIFIC ATMOSPHERIC CORROSIVITY	MINIMUM TIME TO FIRST MAJOR MAINTENANCE	POSSIBLE SURFACE TREATMENTS TO SNZ TS 3404
EXPOSED EXTERIOR	C3 OR LESS	15+ YEARS	HDG390 (390g/m² OF GALVANISING)

31. ADDITIONAL COATINGS MAY BE REQUIRED FOR ARCHITECTURAL FINISHES IN ADDITION TO THE MINIMUM SPECIFIED ABOVE. REFERENCE SHALL ALSO BE MADE TO THE ARCHITECTURAL SPECIFICATIONS. THE ENGINEER SHALL BE NOTIFIED FOR A DECISION SHOULD THERE BE ANY AMBIGUITY PRIOR TO THE APPLICATION OF ANY COATING SYSTEMS.
32. THE CONTRACTOR SHALL PREPARE A DETAILED COATINGS SPECIFICATION (INCLUDING THE STEEL PREPARATION, COATINGS TO BE APPLIED AND THE LIFE TO FIRST MAJOR MAINTENANCE OF EACH SYSTEM) AND SUBMIT TO THE ENGINEER FOR REVIEW.
33. ALL SUBSEQUENT COATINGS (FOR EXAMPLE INTUMESCENT PAINTS AND/OR ARCHITECTURAL FINISHES, MUST BE COMPATIBLE WITH THE CHOSEN CORROSION PROTECTION. CONFIRMING COMPATIBILITY IS THE RESPONSIBILITY OF THE CONTRACTOR.

CONSTRUCTION

1. UNLESS NOTED OTHERWISE, THIS BUILDING IS OF STANDARD CONSTRUCTION METHODOLOGY AND AS SUCH, A COMPETENT CONTRACTOR SHOULD BE CAPABLE OF ITS CONSTRUCTION.
2. IN GENERAL, PROPPING OF ELEMENTS (INCLUDING BUT NOT LIMITED TO BEAMS, WALLS, FLOORS AND THE LIKE) IS TO BE DESIGNED, INSTALLED AND INSPECTED BY THE CONTRACTOR (OR SUBCONTRACTORS). IT IS RECOMMENDED THAT THE PROPPING PLAN IS PROVIDED TO THE ENGINEER FOR REVIEW PRIOR TO PROCEEDING.
3. SPECIFIC RISKS THE FOLLOWING SPECIFIC RISKS REMAIN IN THE STRUCTURAL DESIGN
(A) NONE

ALTERATIONS AND DECONSTRUCTION

1. ALL ALTERATIONS TO PRIMARY STRUCTURE SHALL BE UNDERTAKEN UNDER GUIDANCE OF A CPENG STRUCTURAL ENGINEER. THE ENGINEER SHALL CONSIDER THE NOTES ABOVE REGARDING CONSTRUCTION RISKS AND REVIEW THE DESIGN FEATURES REPORT WHICH SHOWS THE LOADS ALLOWED IN THE DESIGN.
2. GENERALLY, THE STRUCTURE SHOULD BE DEMOLISHED IN THE REVERSE SEQUENCE THAT IT WAS BUILT. HOWEVER, A DECONSTRUCTION SEQUENCE SHALL BE PREPARED AND REVIEWED BY A CPENG STRUCTURAL ENGINEER TO ENSURE THE DECONSTRUCTION CAN BE COMPLETED SAFELY WITHOUT THE STRUCTURE BECOMING UNSTABLE. THE ENGINEER SHALL CONSIDER THE NOTES ABOVE REGARDING CONSTRUCTION RISKS AND REVIEW THE DESIGN FEATURES REPORT WHICH SHOWS THE LOADS ALLOWED IN THE DESIGN.
3. SPECIFIC DECONSTRUCTION RISKS THE FOLLOWING SPECIFIC RISKS REMAIN IN THE STRUCTURAL DESIGN
(A) NONE

THIS DRAWING PACKAGE IS A GENERIC DESIGN WHICH IS ONLY SUITABLE UNDER THE FOLLOWING CONDITIONS:
1) ULTIMATE BEARING CAPACITY AT LEAST 150kPa.
2) SITE GEOTECHNICAL HAZARDS CONFIRMED BY GEOTECHNICAL INVESTIGATION SUITABLE FOR THE INDICATED FOUNDATION SYSTEM.
3) THE NEED FOR COMPACTED HARDFILL LAYERS TO BE CONFIRMED BY THE GEOTECHNICAL REPORT.
4) ULS DESIGN WIND SPEED LESS THAN OR EQUAL TO 45.05m/s AND SLS DESIGN WIND SPEED LESS THAN OR EQUAL TO 41.83m/s
5) CORROSION ZONE IN ACCORDANCE WITH SNZ TS 3404 EITHER C1, C2 OR C3.
THESE CONDITIONS WILL BE SPECIFICALLY CHECKED AND A LETTER PROVIDING SUPPORTING THE USE OF THE GENERIC PS1 FOR THE SITE.

NOTE:
1) DESIGN LIFE = 50 YEARS
2) IMPORTANCE LEVEL 1
3) HOLDING DOWN BOLTS MUST BE TENSIONED TO THE PART TURN METHOD PER NZS3404

COPYRIGHT BABBAGE CONSULTANTS LIMITED
UNAUTHORISED COPYING PROHIBITED
DO NOT SCALE THIS DRAWING
PLEASE REFER ALL QUERIES TO
BABBAGE CONSULTANTS LIMITED

Notes:
1. All Structural Drawings are to be read in conjunction with the Architectural Drawings.
2. All set out dimensions, levels, falls, slab set downs, rebates and cast in Architectural items are subject to confirmation by the Architect.
3. Refer to Drawing S001 for General Notes, Abbreviations and Symbols.

DRAWING REVISIONS

REV	DATE	DESCRIPTION
A	24/01/2024	Generic PS1

Babbage
partners in excellence
Babbage Consultants Limited
128 Montreal Street, Sydenham, Christchurch 8023
PO Box 2373 - Christchurch 8140, New Zealand
T: 03 379 2734 F: 03 379 1642
E: chch@babbage.co.nz www.babbage.co.nz

CLIENT / PROJECT / ADDRESS

MAGNATECH LIGHTING PYLON

18M HIGH STANDARD PYLON

DRAWING TITLE

STANDARD NOTES

	DATE	INITIAL
DESIGNED	24/01/2024	SW
DRAWN	24/01/2024	SW
CHECKED	24/01/2024	NC
APPROVED	24/01/2024	NC

SCALE
NTS

JOB NO.	DRAWING NO.	REVISION
66865	S002	A

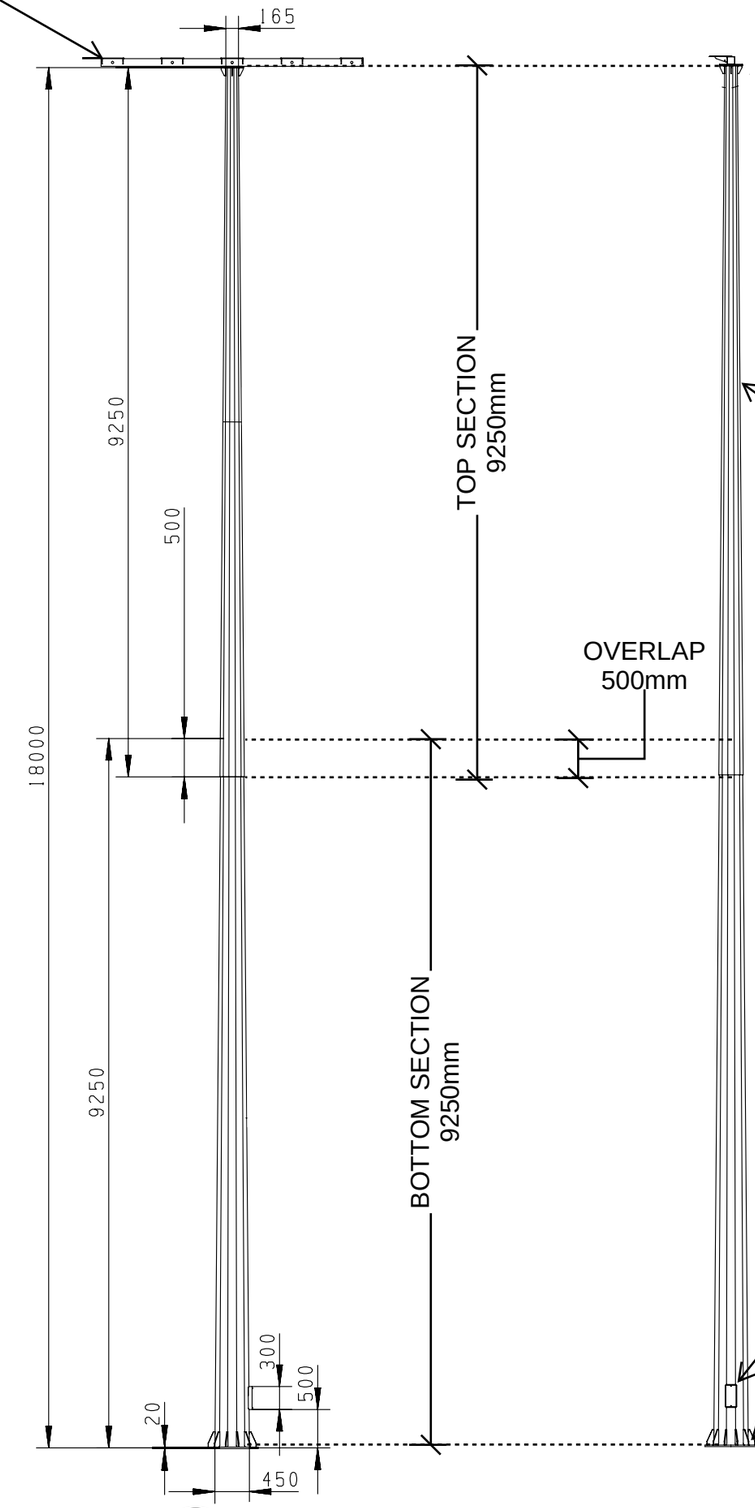

100x100x4.0 SHS MIN GRADE 350MPa LAMP CROSS BAR, REFER S004 FOR DETAILS

5mm THICK GRADE Q460B TAPERED DODECAGON SECTION, SLOTTED INTO BOTTOM SECTION WITH MIN. 500mm OVERLAP

6mm THICK GRADE Q460B TAPERED DODECAGON SECTION, TOP SECTION SLOTTED OVER BOTTOM SECTION WITH MIN. 500mm OVERLAP

REFER S006 FOR CABLE SLOT DETAILS

STEEL BASEPLATE, REFER S006

Site requirement:

- Maximum SLS wind speed = 41.83 m/s
- Maximum ULS wind speed = 45.05 m/s
- Ultimate soil bearing capacity >= 150kPa

1 / S004 18M STEEL PYLON ELEVATION
NTS

COPYRIGHT BABBAGE CONSULTANTS LIMITED
UNAUTHORISED COPYING PROHIBITED
DO NOT SCALE THIS DRAWING
PLEASE REFER ALL QUERIES TO
BABBAGE CONSULTANTS LIMITED

Notes:
1. All Structural Drawings are to be read in conjunction with the Architectural Drawings.
2. All set out dimensions, levels, falls, slab set downs, rebates and cast in Architectural items are subject to confirmation by the Architect.
3. Refer to Drawing S001 for General Notes, Abbreviations and Symbols.

DRAWING REVISIONS

REV	DATE	DESCRIPTION
A	24/01/2024	Generic PS1

Babbage
partners in excellence®
Babbage Consultants Limited
128 Montreal Street, Sydenham, Christchurch 8023
PO Box 2373 - Christchurch 8140, New Zealand
T: 03 379 2734 F: 03 379 1642
E: chch@babbage.co.nz www.babbage.co.nz

CLIENT / PROJECT / ADDRESS

MAGNATECH LIGHTING PYLON

18M HIGH STANDARD PYLON

DRAWING TITLE

LIGHT PYLON ELEVATION

	DATE	INITIAL
DESIGNED	24/01/2024	SW
DRAWN	24/01/2024	SW
CHECKED	24/01/2024	NC
APPROVED	24/01/2024	NC

SCALE
NTS

JOB NO.	DRAWING NO.	REVISION
66865	S003	A

CONNECT TO PYLON TOP
SECTION, REFER DETAIL 3/S004

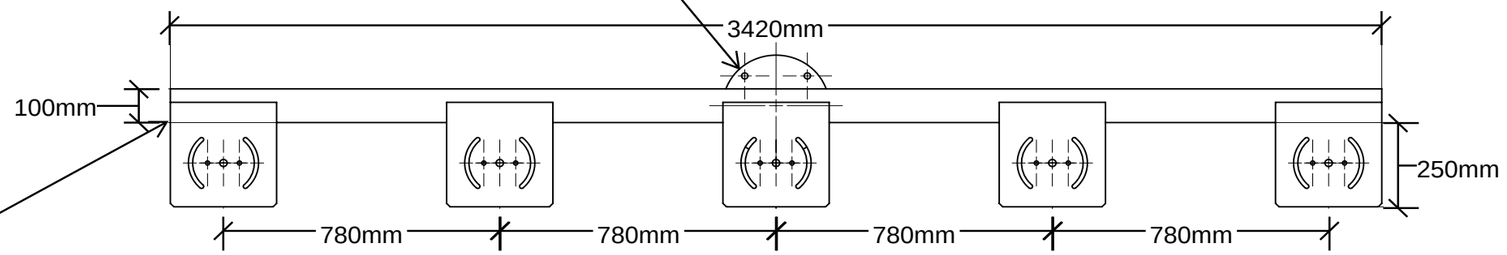

100x100x4.0 SHS MIN GRADE
350MPa LAMP CROSS BAR

1 / S004 5 LAMP CROSS BAR
NTS

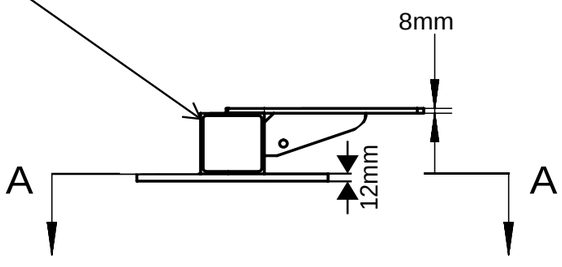

2 / S004 5 LAMP CROSS BAR
NTS

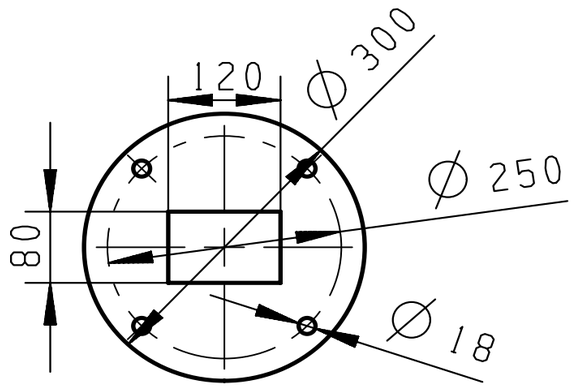

3 / S004 SECTION A-A
NTS

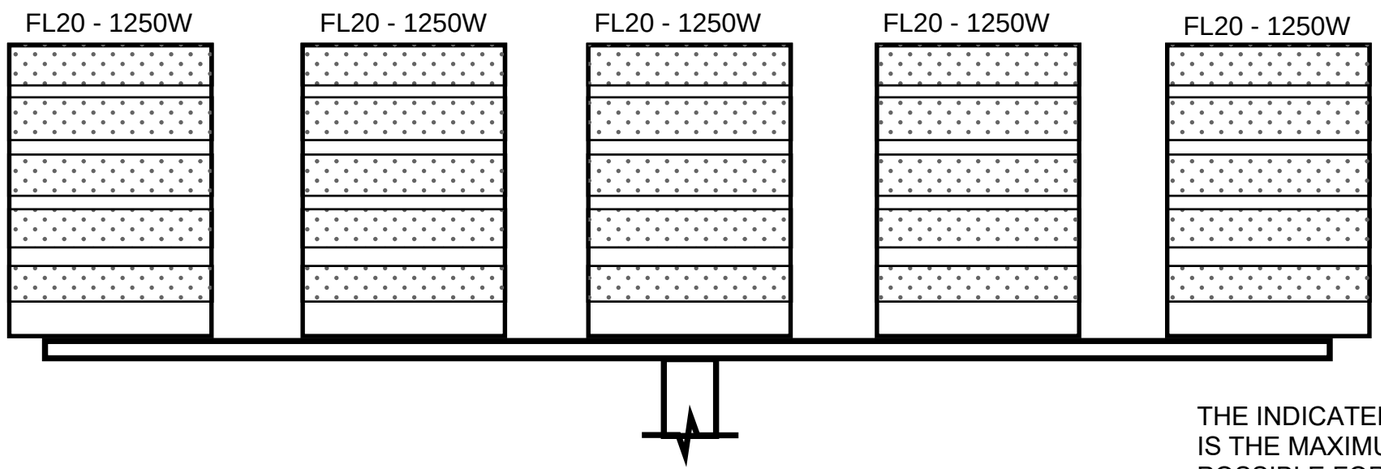

LED Panel Configuration (Elevation)

THE INDICATED LIGHTING CONFIGURATION IS THE MAXIMUM WINDWARD AREA POSSIBLE FOR THIS POLE CONFIGURATION. IF LIGHTING IS ALTERED, CHECK WITH THE ENGINEER.

COPYRIGHT BABBAGE CONSULTANTS LIMITED
UNAUTHORISED COPYING PROHIBITED
DO NOT SCALE THIS DRAWING
PLEASE REFER ALL QUERIES TO
BABBAGE CONSULTANTS LIMITED

Notes:
1. All Structural Drawings are to be read in conjunction with the Architectural Drawings.
2. All set out dimensions, levels, falls, slab set downs, rebates and cast in Architectural items are subject to confirmation by the Architect.
3. Refer to Drawing S001 for General Notes, Abbreviations and Symbols.

DRAWING REVISIONS

REV	DATE	DESCRIPTION
A	24/01/2024	GENERIC PS1
B	23/04/2024	UPDATED PS1

Babbage
partners in excellence
Babbage Consultants Limited
128 Montreal Street, Sydenham, Christchurch 8023
PO Box 2373 - Christchurch 8140, New Zealand
T: 03 379 2734 F: 03 379 1642
E: chch@babbage.co.nz www.babbage.co.nz

CLIENT / PROJECT / ADDRESS

MAGNATECH LIGHTING PYLON

18M HIGH STANDARD PYLON

DRAWING TITLE

LAMP CROSS BAR DETAIL

	DATE	INITIAL
DESIGNED	24/01/2024	SW
DRAWN	24/01/2024	SW
CHECKED	24/01/2024	NC
APPROVED	24/01/2024	NC

SCALE
NTS

JOB NO.	DRAWING NO.	REVISION
66865	S004	B

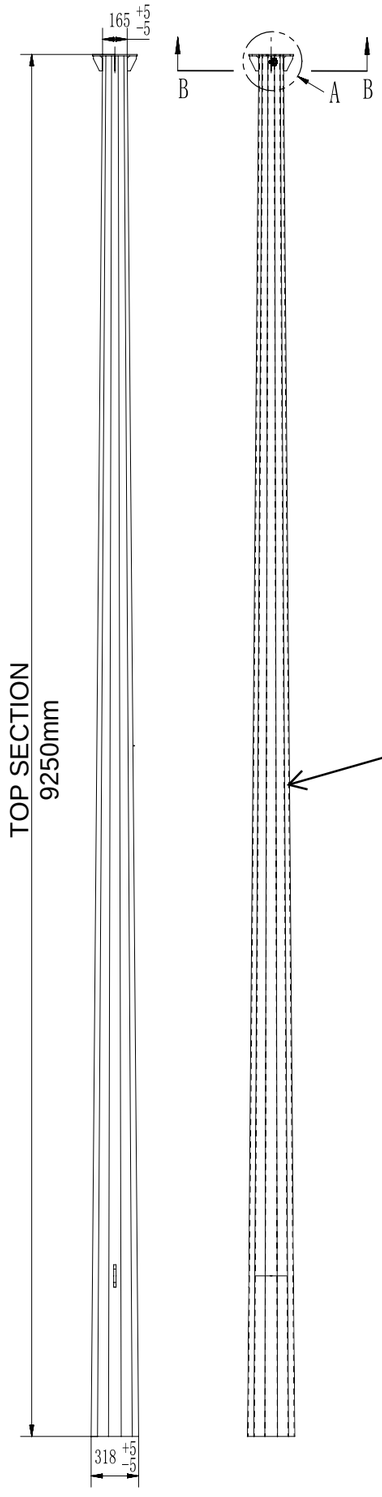

5mm THICK GRADE Q460B
TAPERED DODECAGON SECTION,
SLOTTED INTO BOTTOM SECTION
WITH MIN. 500mm OVERLAP

1 / S005 LIGHT PYLON TOP SECTION
NTS

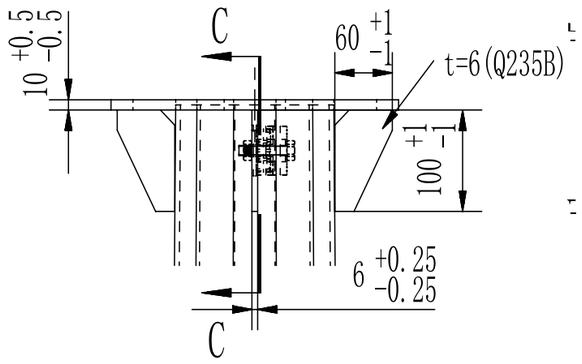

2 / S005 DETAIL A
NTS

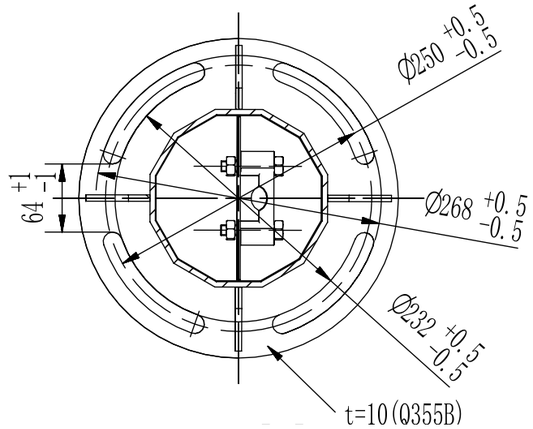

SECTION B-B

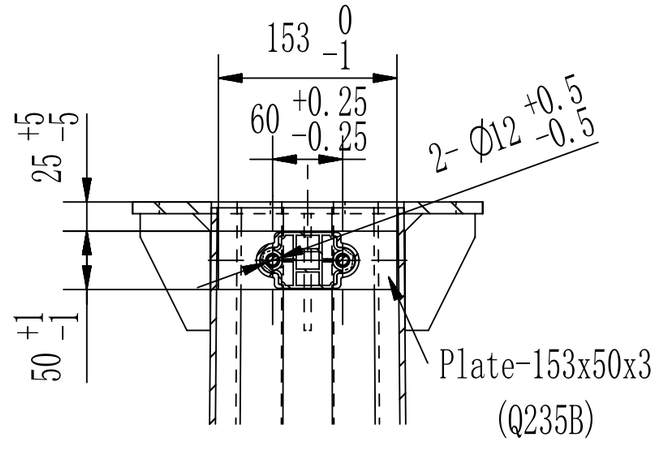

3 / S005 SECTION C-C
NTS

Site requirement:

- Maximum SLS wind speed = 41.83 m/s
- Maximum ULS wind speed = 45.05 m/s
- Ultimate soil bearing capacity >= 150kPa

COPYRIGHT BABBAGE CONSULTANTS LIMITED
UNAUTHORISED COPYING PROHIBITED
DO NOT SCALE THIS DRAWING
PLEASE REFER ALL QUERIES TO
BABBAGE CONSULTANTS LIMITED

Notes:
1. All Structural Drawings are to be read in conjunction with the Architectural Drawings.
2. All set out dimensions, levels, falls, slab set downs, rebates and cast in Architectural items are subject to confirmation by the Architect.
3. Refer to Drawing S001 for General Notes, Abbreviations and Symbols.

DRAWING REVISIONS

REV	DATE	DESCRIPTION
A	24/01/2024	Generic PS1

Babbage
partners in excellence
Babbage Consultants Limited
128 Montreal Street, Sydenham, Christchurch 8023
PO Box 2373 - Christchurch 8140, New Zealand
T: 03 379 2734 F: 03 379 1642
E: chch@babbage.co.nz www.babbage.co.nz

CLIENT / PROJECT / ADDRESS

MAGNATECH LIGHTING PYLON

18M HIGH STANDARD PYLON

DRAWING TITLE

PYLON TOP SECTION

	DATE	INITIAL
DESIGNED	24/01/2024	SW
DRAWN	24/01/2024	SW
CHECKED	24/01/2024	NC
APPROVED	24/01/2024	NC

SCALE
NTS

JOB NO.	DRAWING NO.	REVISION
66865	S005	A

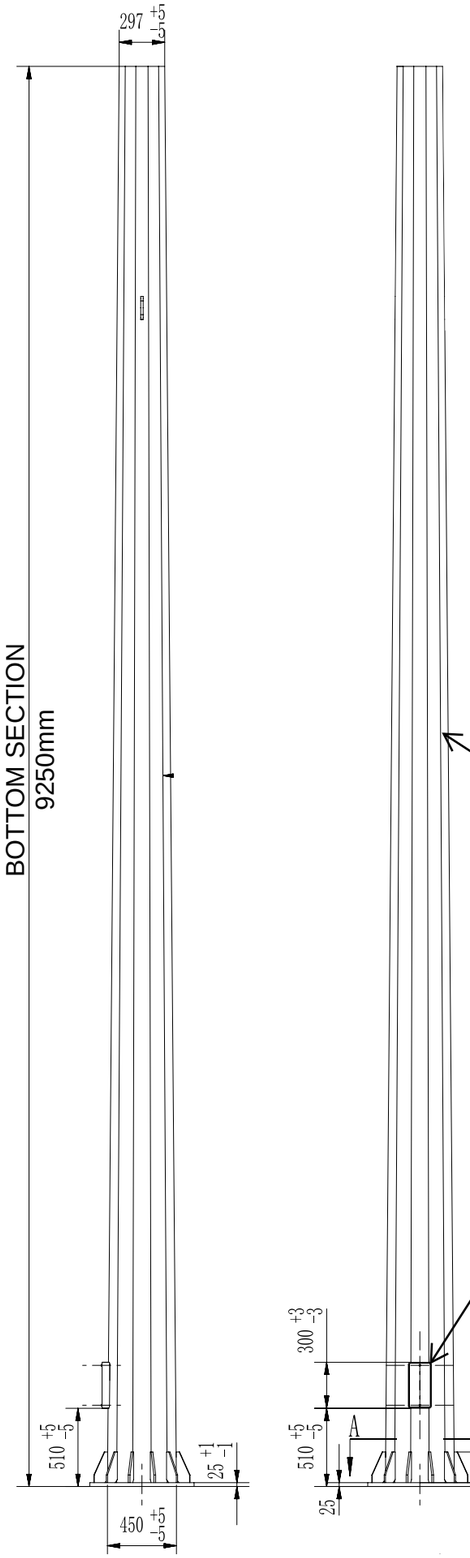

6mm THICK GRADE Q460B TAPERED DODECAGON SECTION, SLOTTED INTO BOTTOM SECTION WITH MIN. 500mm OVERLAP

SLOTTED HOLE WITH 6mm STIFFENER AROUND, 6FWAR AROUND THE EDGES TO THE STEEL PYLON.

1 / S006 LIGHT PYLON BOTTOM SECTION
NTS

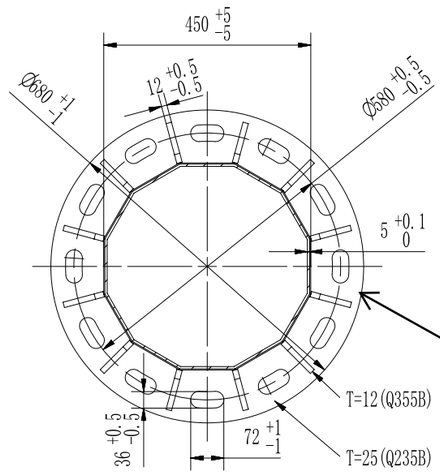

25mm THICK GRADE Q235B BASEPLATE CONNECT TO REINFORCE CONCRETE FOUNDATION BELOW WITH HEADED BOLTS, REFER DRAWING S007 FOR FOUNDATION AND CONNECTION DETAILS.

2 / S006 SECTION A-A
NTS

Site requirement:

- Maximum SLS wind speed = 41.83 m/s
- Maximum ULS wind speed = 45.05 m/s
- Ultimate soil bearing capacity >= 150kPa

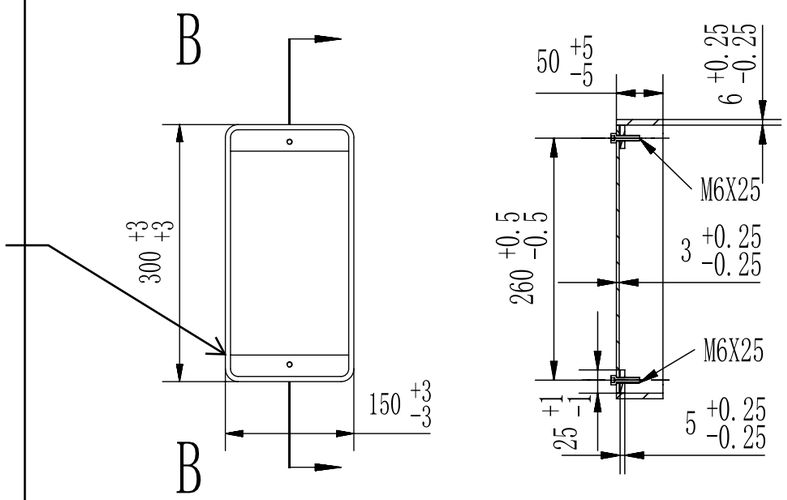

STIFFENER

SECTION B-B

3 / S006 STIFFENER DETAILS
NTS

COPYRIGHT BABBAGE CONSULTANTS LIMITED
UNAUTHORISED COPYING PROHIBITED
DO NOT SCALE THIS DRAWING
PLEASE REFER ALL QUERIES TO
BABBAGE CONSULTANTS LIMITED

Notes:
1. All Structural Drawings are to be read in conjunction with the Architectural Drawings.
2. All set out dimensions, levels, falls, slab set downs, rebates and cast in Architectural items are subject to confirmation by the Architect.
3. Refer to Drawing S001 for General Notes, Abbreviations and Symbols.

DRAWING REVISIONS

REV	DATE	DESCRIPTION
A	24/01/2024	Generic PS1

Babbage
partners in excellence
Babbage Consultants Limited
128 Montreal Street, Sydenham, Christchurch 8023
PO Box 2373 - Christchurch 8140, New Zealand
T: 03 379 2734 F: 03 379 1642
E: chch@babbage.co.nz www.babbage.co.nz

CLIENT / PROJECT / ADDRESS

MAGNATECH LIGHTING PYLON

18M HIGH STANDARD PYLON

DRAWING TITLE

PYLON BOTTOM SECTION

	DATE	INITIAL
DESIGNED	24/01/2024	SW
DRAWN	24/01/2024	SW
CHECKED	24/01/2024	NC
APPROVED	24/01/2024	NC

SCALE
NTS

JOB NO.	DRAWING NO.	REVISION
66865	S006	A

BASEPLATE LEVELLING AND BOLTING METHOD

- FOUNDATION AND PLINTH CONCRETE TO REACH 20MPa PRIOR TO POLES BEING ERECTED.
- LEVELLING NUTS ARE NOT TO BE USED
- INSTALL POLE ON LEVELLING SHIMS, TIGHTEN NUTS UNTIL THE POLE IS LEVEL.
- USE THE PART TURN METHOD TO TIGHTEN ALL BOLTS.

Site requirement:

- Maximum SLS wind speed = 41.83 m/s
- Maximum ULS wind speed = 45.05 m/s
- Ultimate soil bearing capacity >= 150kPa

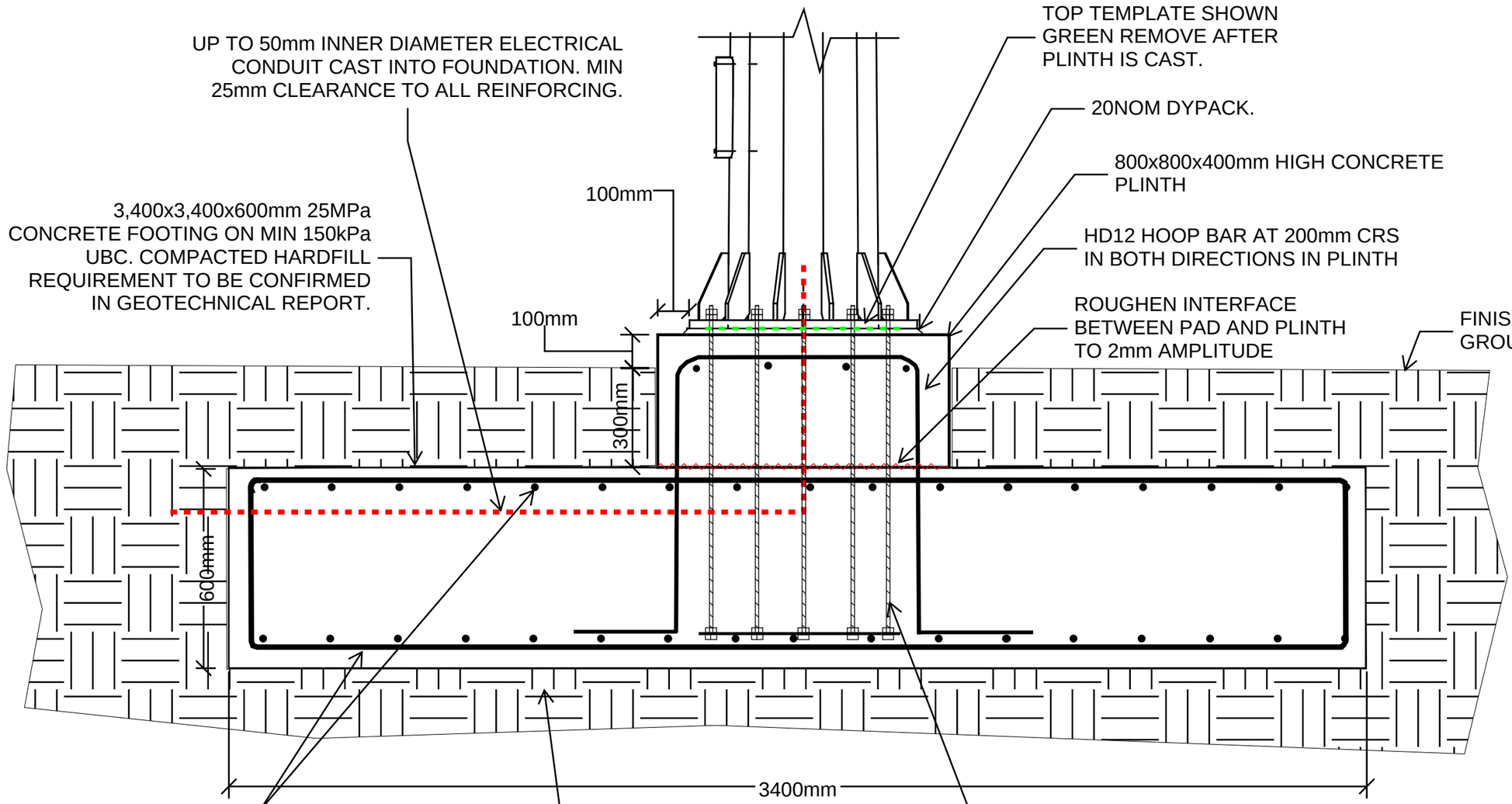

HOLDING DOWN BOLTS MUST BE TENSIONED TO THE PART TURN METHOD PER NZS3404

1 / S007 FOUNDATION DETAIL
NTS

COPYRIGHT BABBAGE CONSULTANTS LIMITED
UNAUTHORISED COPYING PROHIBITED
DO NOT SCALE THIS DRAWING
PLEASE REFER ALL QUERIES TO
BABBAGE CONSULTANTS LIMITED

Notes:
1. All Structural Drawings are to be read in conjunction with the Architectural Drawings.
2. All set out dimensions, levels, falls, slab set downs, rebates and cast in Architectural items are subject to confirmation by the Architect.
3. Refer to Drawing S001 for General Notes, Abbreviations and Symbols.

DRAWING REVISIONS

REV	DATE	DESCRIPTION
A	24/01/2024	GENERIC PS1
B	23/04/2024	UPDATED PS1
C	25/06/2024	ROUGHENED INTERFACE ADDED
D	08/07/2024	ANCHOR UPDATE
E	24/07/2024	UPDATED DESIGN

Babbage
partners in excellence
Babbage Consultants Limited
128 Montreal Street, Sydenham, Christchurch 8023
PO Box 2373 - Christchurch 8140, New Zealand
T: 03 379 2734 F: 03 379 1642
E: chch@babbage.co.nz www.babbage.co.nz

CLIENT / PROJECT / ADDRESS

MAGNATECH LIGHTING PYLON

18M HIGH STANDARD PYLON

DRAWING TITLE

FOUNDATION DETAIL

	DATE	INITIAL
DESIGNED	08/07/2024	SW
DRAWN	08/07/2024	SW
CHECKED	08/07/2024	NC
APPROVED	08/07/2024	NC

SCALE
NTS

JOB NO.	DRAWING NO.	REVISION
66865	S007	E